Be ahead

BUILDING
ACCESS AUTOMATION

VISTA SW 260

VISTA SW 260

Automation systems for automatic pedestrian doors

24 V

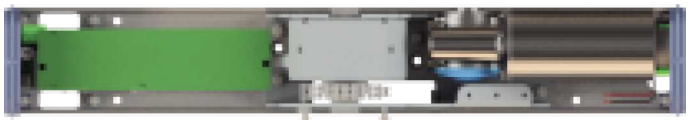

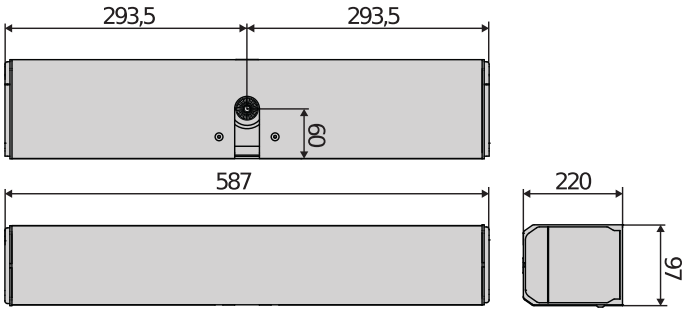

Automation for swing doors for automating large and heavy leaves.
Available with motorised control of opening and closing and with control of closing return spring.
Designed for frequent and intensive use, typical of healthcare facilities and hotels.

Relevant features

EN 16005

Full compliance with standard EN 16005 (Power operated pedestrian doorsets. Safety in use)

Can also be adapted for special architectural solutions (e.g. restricted space) thanks to the compact size of the operator and its modern and simple appearance.

Highly reliable over time and no maintenance required thanks to the self-lubricating chain transmission system.

Simply rotate to ensure complete left-right reversibility of the automation thanks to the central position of the motor shaft.

VISTA SW 260

Automation systems for automatic pedestrian doors

Relevant features

Reduction in assembly times using the arms pre-installed on the standard extension. Different adaptor lengths available to suit special requirements.

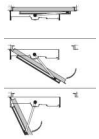

Easy to adjust pre-load by directly adjusting the arm thanks to the special closing spring (SXL version).

Direct access to the control unit's terminal block to simplify wiring tasks.

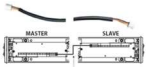

Quick connections for configuration with double leaf gate. The two control units can be connected with a single dedicated cable.

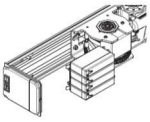

Option to also install the back-up battery inside the SXL version.

Fully compatible with a selection of sensors, switches, VISTA SEL SW programmer from the BFT range.

Automation systems for automatic pedestrian doors

VISTA SW 260

Code	Name	Description
P960666 00002	**VISTA SW 260 MXL**	Operator for swing doors with motor-driven opening and closing. Maximum gate panel weight 260 kg. Ideal for "fail safe" installations (optional battery) Compact size, ideal for use in small spaces.
P960667 00002	**VISTA SW 260 SXL**	Operator for swing doors with motor and spring closure. Maximum gate panel weight 260 kg. Ideal when the gate needs to be closed even when there is no power supply. In this case, the spring allows for manual opening and automatic mechanical closing. Compact size, ideal for use in small spaces.

	VISTA SW 260 MXL	VISTA SW 260 SXL
Leaf type	Swing	Swing
Closing	With motor	With return spring
Number of gate panels	1	1
Max Leaf	260 kg	260 kg
Max automation dimensions	120x95x587 mm	120x95x587 mm
Clear opening	600 ÷ 1400 mm	600 ÷ 1400 mm
Maximum opening angle	110 °	110 °
Opening speed per leaf	up to 70 °/sec	up to 70 °/sec
Closing speed per leaf	up to 40 °/sec	up to 40 °/sec
Control unit	Digital display and dip switch	Digital display and dip switch
Motor voltage	24 V	24 V
Motor type	Dunker	Dunker
Power supply	230V ±10% AC 50/60Hz	230V ±10% AC 50/60Hz
Nominal power	85 W	85 W
Shaft max output torque	35 Nm	35 Nm
Frequency of use	Continuous	Continuous
Anti-crushing function	Force automatically limited in presence of obstacles	Force automatically limited in presence of obstacles
Type of limit switch	encoder	encoder
Emergency operation	with emergency back-up battery (optional)	with emergency back-up battery (optional)
Manual cycle	Reversible	Reversible
Locking	Solenoid Lock	Solenoid Lock
Operating temperature	-10 ÷ 50 °C	-10 ÷ 50 °C
Protection rating	IP40	IP40

VITAL ACCESSORIES

	P111790 - **ASW 260 XL RIG**		P111791 - **ASW 260 XL ART**
	Rigid pull arm Vista SW 260 XL.		Articulated push arm Vista SW 260 XL.
	P111792 - **EXT ASW350 260 XL L=90**		P111796 - **EXT ASW350 260 XL L=110**
	Arm connection L=90 mm Vista SW XL, spacer		Arm connection L=110 mm Vista SW XL, spacer

Automation systems for automatic pedestrian doors

VITAL ACCESSORIES

	P111797 - **EXT ASW350 260 XL L=130** Arm connection L=130 mm Vista SW XL, spacer		P111795 - **BBV SW 260** Emergency battery kit VISTA SW 260.
	P111794 - **ASW 260 XL ARTL ARTIC. ARM PUSH LONG SW 260** Articulated push arm Vista SW 260 XL.		D113789 - **VISTA SEL SW** Function selector Vista SW
	P111657 00001 - **4SAFE IR SAFETY SENSOR MONIT.SW/1MOD/700** Monitored IR safety sensor for side-hung leaves, 1 module, 700 mm		P111657 00002 - **4SAFE IR SAFETY SENSOR MONIT.SW/2MOD/700** Monitored IR safety sensor for side-hung leaves, 2 modules, 700 mm
	P111657 00003 - **4SAFE IR SAFETY SENSOR MONIT.SW/2MOD/900** Monitored IR safety sensor for side-hung leaves, 2 modules, 900 mm		

RECOMMENDED ACCESSORIES

	P111793 - **TSWP XL 260 PROFILES VISTA SW 260 DUAL** Profiles Vista SW double, 1.5 m.		P111656 - **VIO-ST** Infrared safety sensor, monitored
	P111662 - **VIO-M** Compact mono-directional activation sensor		P111756 - **OA-EDGE T 340 1M** Active infrared sensor for security L 340 mm with 1 module with safety test
	P111757 - **OA-EDGE T 700 1M** Active infrared sensor for security L 700 mm with 1 module with safety test		P111758 - **OA-EDGE T 1200 2M** Active infrared sensor for security L 1200 mm with 2 modules with safety test
	P111759 - **OT 3** Elbow-operated pushbutton, silver		

Automation systems for automatic pedestrian doors

What is U-Link?

The technology that gives you more power

U-Link, Universal Link, is an exclusive BFT platform that can be used to create high-tech ecosystems.
In Home Access Automation, it can be used to communicate with all home access automation devices of any brand. This saves you time and allows you to control everything easily and without any worries.

It is intuitive
Easy to install and to use

It is scalable
You can add as many devices as you want

It is flexible
It allows you to create groups of interconnected products

It is practical
Works with or without an internet connection

It is functional
Its settings can be controlled remotely using dedicated applications

Automation systems for automatic pedestrian doors

Everything on one screen: find out more about this amazing technology

A world-exclusive platform that can be used to create high-tech ecosystems offering a vast range of solutions for many different sectors.

This proprietary platform which is a key feature of BFT products, thanks to the B-EBA cards and the Clonix U-Link receiver, is suitable for any protocol or product for access automation (including BFT products non-BFT ones and older versions) and it can be used in a variety of different sectors. This means any device becomes a smart device which can be interconnected with other systems, using a language that is becoming universal.

U-Control HOME

U-Control HOME is the application that allows you to open the gate to your home and to remotely control BFT automations using your own smartphone. The iOS version can be used to automatically open the automation when you are close to it.

U-Base 2

A software package for installation, performing maintenance and identifying any faults in the U-Link compatible operators, easily and conveniently.

U-SDK

U-SDK is the application which allows BFT automations to be made compatible and easily integrated with a BMS network.

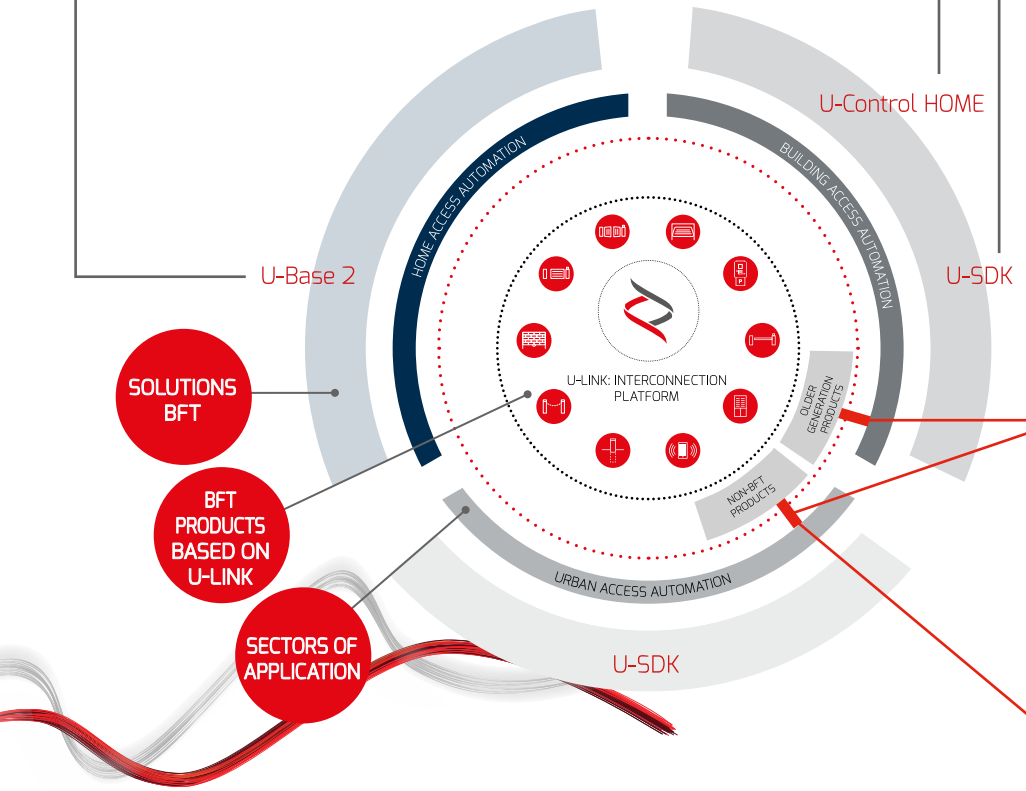

Clonix U-Link

Connect non-native U-Link and non-BFT products to U-Link systems.

Is it possible to connect non-native U-Link BFT operators or other brands of products to U-Link? Yes, thanks to the Clonix receivers. Accessories which accept no limits.

B-EBA

A direct link to your operators.

The B-EBA expansion cards make it possible to connect external devices such as PCs, smartphones and tablets to a BFT operator and a Clonix receiver or to connect multiple BFT products in a U-Link network. These accessories integrate with U-Link technology and with Bluetooth, Wifi, Z-Wave and TCP/IP protocols as well as with the RS485 serial interface. A device that demonstrates exactly what BFT means by interconnectivity.

INFORMATION REGARDING THE PROTECTION OF THE INDUSTRIAL AND INTELLECTUAL PROPERTY RIGHTS OF BFT. BFT S.p.A. protects its industrial property by depositing trademarks, patents, models and designs. The intellectual property of BFT S.p.A. is protected by copyright law. BFT S.p.A. also protects its know-how by taking measures to protect the technical and commercial information inherent in its company and products. All the products in this catalogue are ORIGINAL BFT MODELS and only BFT S.p.A is authorised to produce them and market them anywhere in the world. All the commercial names in this catalogue are owned by BFT S.p.A., and only BFT S.p.A. is authorised to use them in relation to the corresponding merchandise category. FALSIFIERS WILL BE PROCEEDED AGAINST IN ACCORDANCE WITH BOTH CIVIL AND CRIMINAL LAW. THESE CONDITIONS NOT ONLY GUARANTEE THE INTELLECTUAL PROPERTY RIGHTS OF BFT, BUT ALSO PROTECT CUSTOMERS BY GUARANTEEING THAT THE PRODUCTS THEY ARE PURCHASING ARE ORIGINAL BFT PRODUCTS RESULTING FROM STUDIES AND DESIGNS WITHIN THE BFT COMPANY.