Be ahead

HOME
ACCESS AUTOMATION

SUB BT

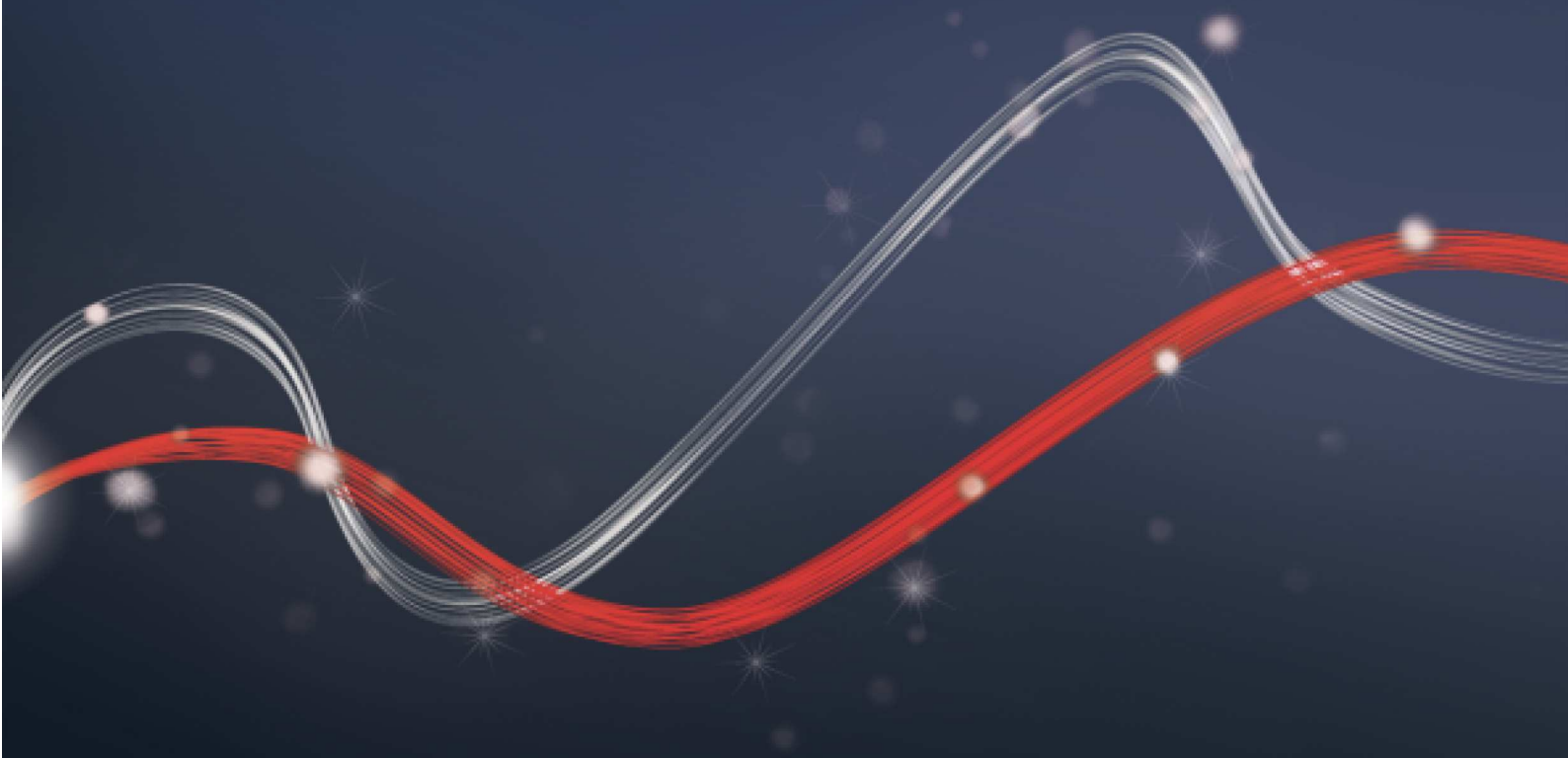

SUB BT

Hydraulic automation systems for swing gates

ee link · er ready · d-track · 24 V · U-Link

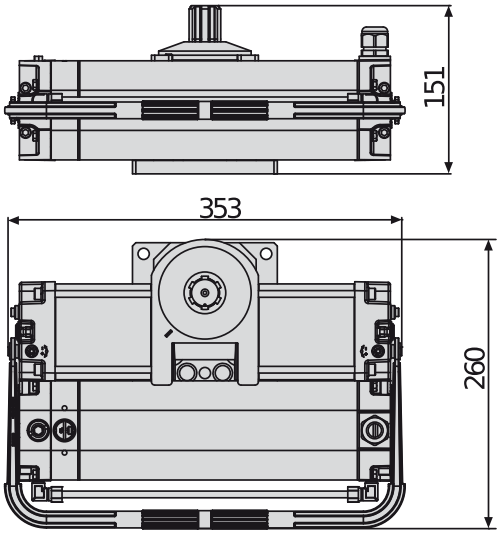

Low voltage hydraulic operator for very intensive use, suitable for any type of residential, industrial or multi-residence application.
Compact and sturdy, they can automate swing gate leaves up to 2.5m wide and weighing up to 800kg.
Fitted with mechanical stops and virtual encoder, guaranteeing maximum anti-crushing safety thanks to the electronic slowdown and D-Track system

Relevant features

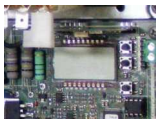

Control unit with programming display and new, simplified scenario-based programming

Fully adjustable mechanical stops inside the operator

The monoblock structure gives the possibility of a very neat installation that is extremely reliable over time.

Hydraulic automation systems for swing gates

SUB BT

Code	Name	Description
P930123 00001	SUB BT	Low voltage, in-ground irreversible hydraulic operator for hinged leaves up to 2.5 m. weight 800 kg. D-Track

THALIA P: Control panel for one or two 24V electromechanical and hydraulic operators for swing gates with electric lock management, for highly complex systems

D113747 00002 - THALIA P - Recommended

- Card power supply: 230 V single-phase
- Operators power supply: 24Vdc 240W max each operator
- Main features: removable terminal blocks with new standard colour-coding, simplified scenario-based programming with display and incorporated dual channel receiver, D-Track anti-crushing system , slowdown during opening and closing and electronic self-learning
- Main features: automatic closing, rapid closing, partial opening, operation with deadman feature, direct connection powered solenoid lock and electromagnet, direct connection edge 8K2.
- Application: display panel for 1 or 2 24V operators
- Compatibility: LIBRA, LIBRA R, LIBRA MA R

	SUB BT
Control unit	THALIA P
Board power supply	230 V
Motor voltage	24 V
Power consumption	300 W
Max. width of door/gate wing	2,50 m
Max. weight of door/gate wing	800 kg
Maximum angle	120 °
Cycle time	13 s
Slowdown	Yes
Locking	Open/close hydraulics
Release	Lever or lever with personalised key
Impact reaction	D-Track
Frequency of use	very intensive
Protection rating	IP67
Environmental conditions	-20 ÷ 60 °C

VITAL ACCESSORIES

D113745 00002 - **THALIA**

Control panel with display for one or two 24V electromechanical operators for swing gates

N733480 00001 - **FCS BT**

Foundation box for SUB BT series operators

N733392 - **SCC**

Release for ELI AC A, ELI BT A and SUB BT with lever key.

N733502 - **SCP**

Release for ELI AC A, ELI BT A and SUB BT with personalized key.

Hydraulic automation systems for swing gates

RECOMMENDED ACCESSORIES

	P111782 - **COMPACTA A20-180** Pair of photocells adjustable 180° horizontally. 20 metre range. 12-33 VAC/15-35 VDC power supply.		D114094 00003 - **RADIUS LED BT A R0** Flashing light without incorporated antenna for motors with 24 V power supply.
	D114093 00003 - **RADIUS LED BT A R1** Flashing light with incorporated antenna for motors with 24 V power supply.		D114168 00003 - **RADIUS LED BT A R1 W** Flashing light with incorporated antenna for motors with 24 V power supply. White flashing light.
	P125020 - **BBT BAT** Set of backup batteries for THALIA, THALIA P, ZARA and PHEBE		

Hydraulic automation systems for swing gates

What is U-Link?

The technology that gives you more power

U-Link, Universal Link, is an exclusive BFT platform that can be used to create high-tech ecosystems.
In Home Access Automation, it can be used to communicate with all home access automation devices of any brand. This saves you time and allows you to control everything easily and without any worries.

It is intuitive
Easy to install and to use

It is scalable
You can add as many devices as you want

It is flexible
It allows you to create groups of interconnected products

It is practical
Works with or without an internet connection

It is functional
Its settings can be controlled remotely using dedicated applications

Hydraulic automation systems for swing gates

Everything on one screen: find out more about this amazing technology

A world-exclusive platform that can be used to create high-tech ecosystems offering a vast range of solutions for many different sectors.

This proprietary platform which is a key feature of BFT products, thanks to the B-EBA cards and the Clonix U-Link receiver, is suitable for any protocol or product for access automation (including BFT products non-BFT ones and older versions) and it can be used in a variety of different sectors. This means any device becomes a smart device which can be interconnected with other systems, using a language that is becoming universal.

U-Control HOME

U-Control HOME is the application that allows you to open the gate to your home and to remotely control BFT automations using your own smartphone. The iOS version can be used to automatically open the automation when you are close to it.

U-Base 2

A software package for installation, performing maintenance and identifying any faults in the U-Link compatible operators, easily and conveniently.

U-SDK

U-SDK is the application which allows BFT automations to be made compatible and easily integrated with a BMS network.

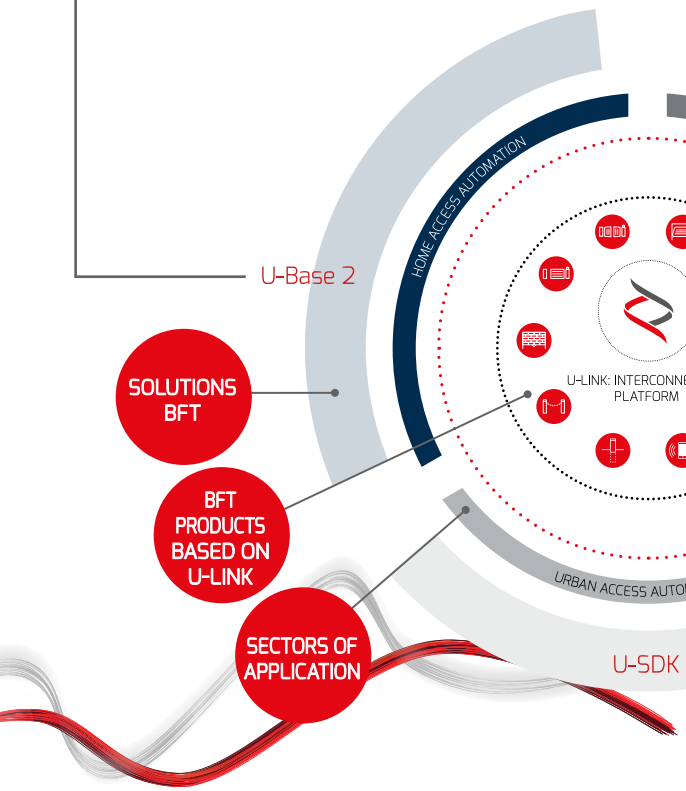

Clonix U-Link

Connect non-native U-Link and non-BFT products to U-Link systems.

Is it possible to connect non-native U-Link BFT operators or other brands of products to U-Link? Yes, thanks to the Clonix receivers. Accessories which accept no limits.

B-EBA

A direct link to your operators.

The B-EBA expansion cards make it possible to connect external devices such as PCs, smartphones and tablets to a BFT operator and a Clonix receiver or to connect multiple BFT products in a U-Link network. These accessories integrate with U-Link technology and with Bluetooth, Wifi, Z-Wave and TCP/IP protocols as well as with the RS485 serial interface. A device that demonstrates exactly what BFT means by interconnectivity.

INFORMATION REGARDING THE PROTECTION OF THE INDUSTRIAL AND INTELLECTUAL PROPERTY RIGHTS OF BFT. BFT S.p.A. protects its industrial property by depositing trademarks, patents, models and designs. The intellectual property of BFT S.p.A. is protected by copyright law. BFT S.p.A. also protects its know-how by taking measures to protect the technical and commercial information inherent in its company and products. All the products in this catalogue are ORIGINAL BFT MODELS and only BFT S.p.A is authorised to produce them and market them anywhere in the world. All the commercial names in this catalogue are owned by BFT S.p.A., and only BFT S.p.A. is authorised to use them in relation to the corresponding merchandise category. FALSIFIERS WILL BE PROCEEDED AGAINST IN ACCORDANCE WITH BOTH CIVIL AND CRIMINAL LAW. THESE CONDITIONS NOT ONLY GUARANTEE THE INTELLECTUAL PROPERTY RIGHTS OF BFT, BUT ALSO PROTECT CUSTOMERS BY GUARANTEEING THAT THE PRODUCTS THEY ARE PURCHASING ARE ORIGINAL BFT PRODUCTS RESULTING FROM STUDIES AND DESIGNS WITHIN THE BFT COMPANY.