Be ahead

URBAN

ESPAS 30-A ULTRA

ESPAS 30-A ULTRA

ESPAS 30 ULTRA

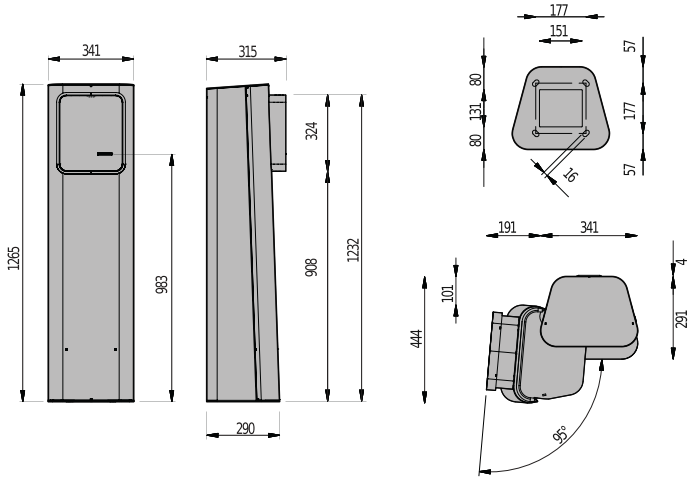

ESPAS 30-A ULTRA ☒☒☒☒☒☒☒☒☒☒☒/☒☒☒☒☒☒☒☒☒☒
☒☒☒☒☒☒☒☒☒☒☒☒
☒☒☒☒☒☒☒☒☒☒☒☒☒☒☒☒☒☒
☒☒☒☒☒☒☒☒☒☒☒☒☒☒☒☒☒
☒☒☒☒☒☒☒☒☒☒☒☒☒☒☒☒☒☒☒☒☒

	ESPAS 30-A ULTRA
☒☒	230 VAC ±10%, 50Hz-60Hz
☒☒☒☒	200 W
☒☒☒☒	70 W
☒☒☒☒	-20 ÷ 50 °C
☒☒	1265 x 341 x 315 mm
☒☒	60 kg
☒☒☒☒☒☒	RS485
☒☒☒☒	RAL7015
☒☒	☒☒☒☒☒2.0 ☒☒☒DD11 (UNI EN 10111)☒☒☒ ☒☒☒☒☒☒☒☒☒☒☒☒☒☒☒☒☒☒

		☒☒		IP □□□	□□□□□	RFID □□□	□□□□□□□
PA5D040R10000	**2607393**	**ESPAS 30-A ULTRA RF**				●	
PA5D040R11000	**2607394**	**ESPAS 30-A ULTRA RF CIT-BUS**	new		●	●	
PA5D040R12000	**2607395**	**ESPAS 30-A ULTRA RF CIT-IP**		●		●	
PA8D040R10000	**2609350**	**ESPAS 30-AH ULTRA RF**	new			●	●
PA8D040R11000	**2609946**	**ESPAS 30-AH ULTRA RF CIT-BUS**	new		●	●	●
PA8D040R12000	**2609972**	**ESPAS 30-AH ULTRA RF CIT-IP**	new	●		●	●

ESPAS 30 ULTRA

☒☒☒☒☒

	Cp 21261 - **Ci** 2606001 **KIT STATIONS ANCHOR BASE** 20/30 ☒☒/☒☒☒☒☒☒☒☒		**Cp** D110945 - **Ci** 2607227 **MAGNETIC LOOP 6MT** ☒☒☒☒☒☒☒☒☒☒☒☒☒☒10☒☒×6☒☒☒
	Cp D141784 - **Ci** 2607232 **MAGNETIC LOOP 8MT** ☒☒☒☒☒☒☒☒☒☒☒☒☒☒10☒☒×8☒☒☒		**Cp** D121711 - **Ci** 2605801 **HEATER UNIT** 60W ☒☒☒☒☒☒☒ DIN ☒☒☒☒☒☒☒/POF ☒☒
	new **Cp** 385256 - **Ci** 2604461 **TRAFFIC LIGHT 3 LED 100MM** ☒☒☒☒☒☒LED☒☒☒-☒-☒☒☒☒☒☒☒☒☒☒☒☒☒☒☒☒☒LED☒☒☒☒100mm☒		**Cp** 130198 - **Ci** 2605635 **TRAFFIC LIGHT LED 100MM** ☒☒☒☒2 ☒ LED ☒☒☒☒100 ☒☒
	Cp D413445 - **Ci** 2605793 **TRUCK HEIGHT PEDESTAL 800MM** 800 ☒☒☒☒☒☒☒☒☒☒☒☒☒☒☒☒/☒☒☒☒		**Cp** D413530 - **Ci** 2605794 **BUS HEIGHT PEDESTAL 600MM** 600 ☒☒☒☒☒☒☒☒☒☒☒☒☒☒☒☒/☒☒☒☒
	Cp D113999 - **Ci** 2605754 **LOOP DETECTOR LITE** ☒☒☒☒☒☒☒☒☒☒☒☒24VDC☒☒☒☒☒☒☒☒☒☒☒ 4 ☒☒☒☒☒☒☒☒☒☒☒☒☒☒☒☒☒☒☒☒☒☒☒☒☒☒		**Cp** D113948 - **Ci** 2605737 **LOOP DETECTOR PRO** ☒☒☒☒☒☒☒☒☒☒☒☒24VDC/AC☒☒☒☒☒☒☒☒☒☒☒ 4 ☒☒☒☒☒☒☒☒☒☒☒☒☒☒☒☒☒☒☒☒☒☒☒☒☒☒☒☒☒☒☒☒
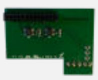	**Cp** P800138 - **Ci** 2606835 **KIT DENEB TO DENEB** ☒☒☒☒☒☒☒☒☒☒☒☒"☒☒"☒"☒☒"☒☒☒☒☒☒☒☒☒☒☒☒☒☒☒☒☒☒☒ 30 ☒☒☒		**Cp** P800137 - **Ci** 2606776 **KIT INTERLOCK FOR PARKING** ☒☒
	Cp 394080 - **Ci** 2607023 **PRESENCE AND SAFETY DETECTOR - LASER LOOPS** ☒☒☒9.9☒ x 9.9☒☒10-35VDC☒☒☒		**Cp** 394073 - **Ci** 2604478 **LASER SAFATEY DETECTOR** ☒☒5☒ x 5☒☒10-35VDC ☒☒☒
	Cp 394075 - **Ci** 2607020 **LASER DETECTOR REMOTE CONTROL** ☒☒☒☒☒☒☒☒☒☒☒☒☒☒☒☒☒☒☒☒☒☒☒☒☒☒☒☒☒☒☒☒		**Cp** P800132 - **Ci** 2606775 **485-TCP/IP CONVERTER KIT** ☒☒☒☒☒☒☒☒ RS-485 ☒☒☒☒☒☒☒☒ TCP/IP☒☒
	Cp 394160 - **Ci** 2605636 **PALO ø60 H3600**		

ESPAS 30 ULTRA

⊠⊠⊠⊠⊠

	⊠⊠⊠⊠⊠⊠⊠⊠⊠⊠⊠⊠⊠60 ⊠⊠ - ⊠ 3600 ⊠⊠			

INFORMATION REGARDING THE PROTECTION OF THE INDUSTRIAL AND INTELLECTUAL PROPERTY RIGHTS OF BFT. BFT S.p.A. protects its industrial property by depositing trademarks, patents, models and designs. The intellectual property of BFT S.p.A. is protected by copyright law. BFT S.p.A. also protects its know-how by taking measures to protect the technical and commercial information inherent in its company and products. All the products in this catalogue are ORIGINAL BFT MODELS and only BFT S.p.A is authorised to produce them and market them anywhere in the world. All the commercial names in this catalogue are owned by BFT S.p.A., and only BFT S.p.A. is authorised to use them in relation to the corresponding merchandise category. FALSIFIERS WILL BE PROCEEDED AGAINST IN ACCORDANCE WITH BOTH CIVIL AND CRIMINAL LAW. THESE CONDITIONS NOT ONLY GUARANTEE THE INTELLECTUAL PROPERTY RIGHTS OF BFT, BUT ALSO PROTECT CUSTOMERS BY GUARANTEEING THAT THE PRODUCTS THEY ARE PURCHASING ARE ORIGINAL BFT PRODUCTS RESULTING FROM STUDIES AND DESIGNS WITHIN THE BFT COMPANY.